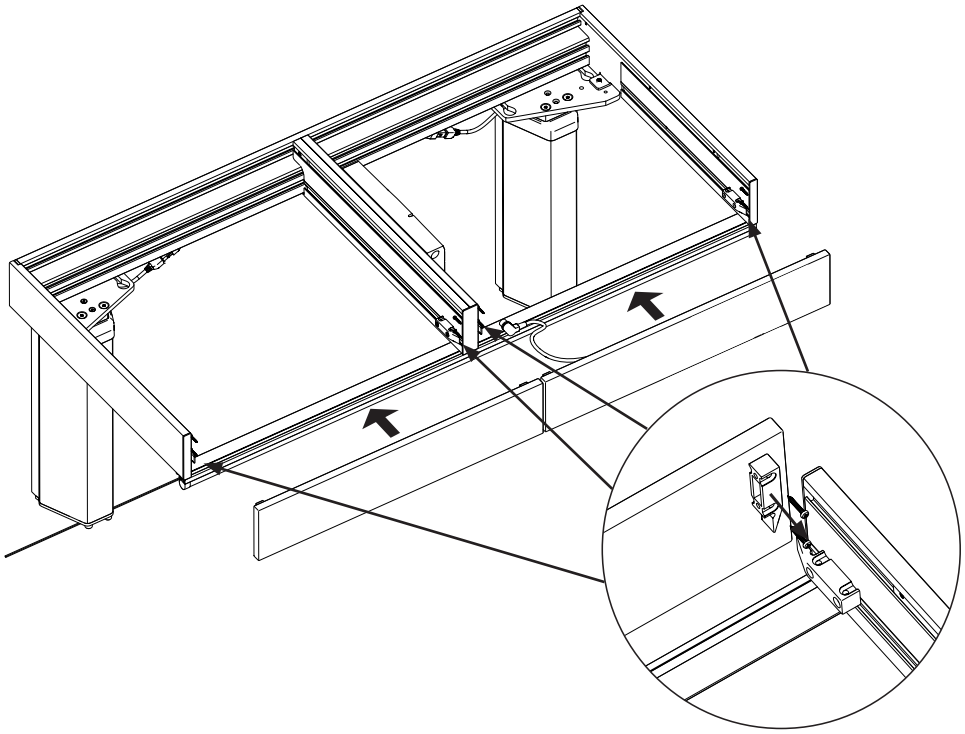

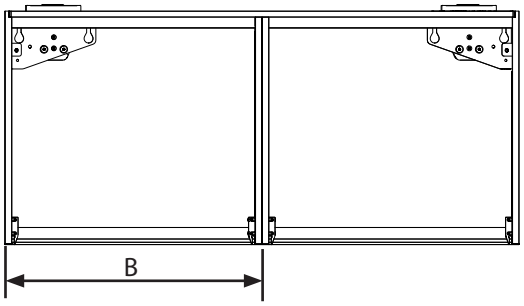
B

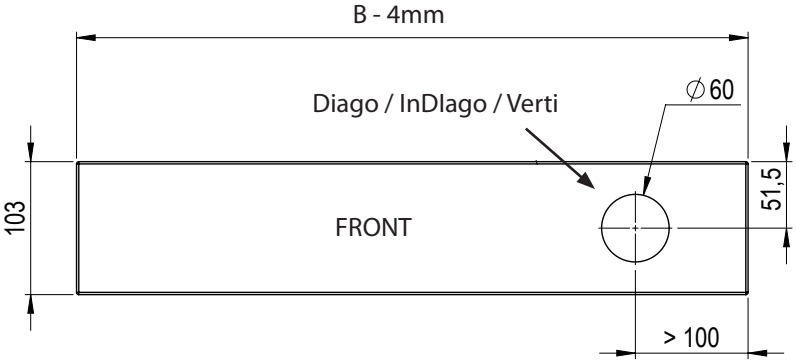
B - 4mm
Diago / InDlago / Verti
∅60
103
FRONT
51,5
> 100

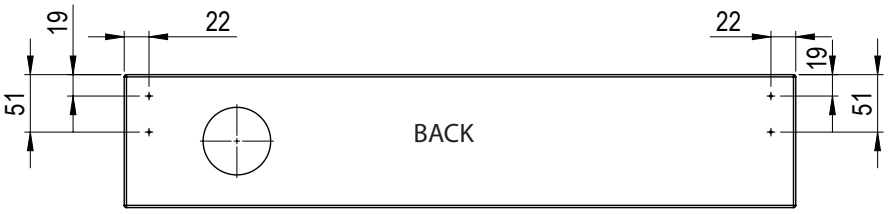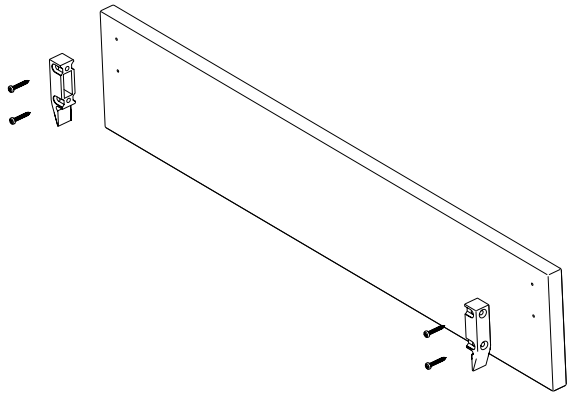
19
22
22
19
51
51
BACK