Ropox FlexiManual Height ADJ Worktop Frame Assembly 2000-2500mm

£2,829.32 Inc. VAT

Product Code: 4G4RMK3

Product Images

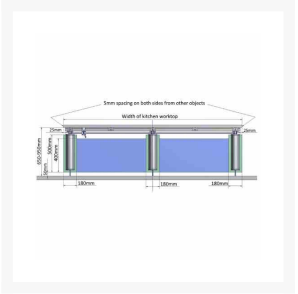

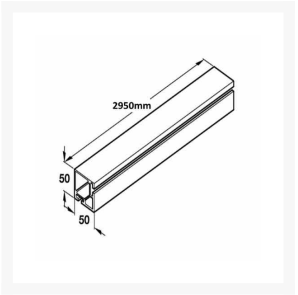

www.independent4life.co.uk | info@independent4life.co.uk | Tel: 0800 500 3001 | VAT No: 942447711
EORI GB942447711000

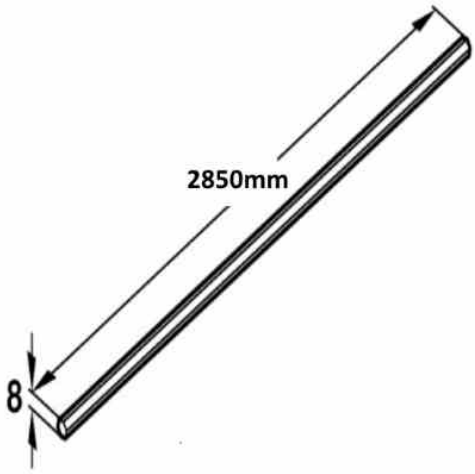

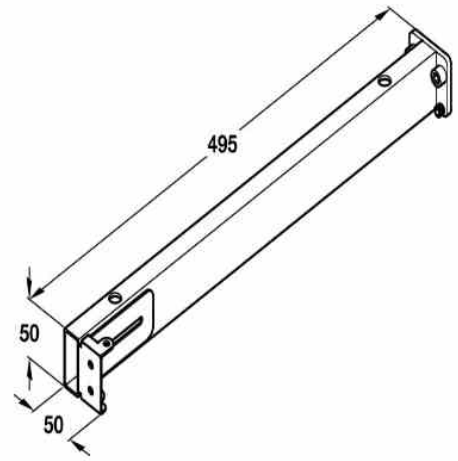

www.independent4life.co.uk | info@independent4life.co.uk | Tel: 0800 500 3001 | VAT No: 942447711
EORI GB942447711000

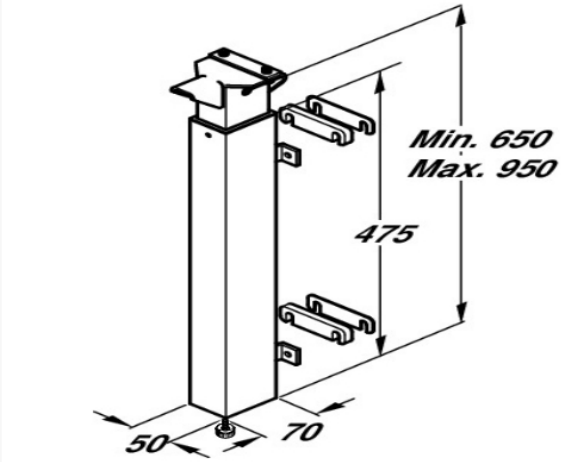

Description

Ropox self assembly FlexiManual rise and fall worktop frame with 650 to 950mm vertical height adjustment via a manual winding handle.

A cost effective way of purchasing this system compared to the ready assembled units, they are non-handed, allowing you to choose the location of the winding handle upon assembly.

- Ideal for single person use of the kitchen where occasional adjustment is required
- Economical alternative to the electric system
- Suitable for installing an insulated shallow bowl kitchen sink with a flexible plumbing kit
- 150kg maximum load - evenly distributed

www.independent4life.co.uk | info@independent4life.co.uk | Tel: 0800 500 3001 | VAT No: 942447711
EORI GB942447711000

- Standard RAL 9010, matt white
- 300mm Manual adjustment via winding handle
- Frame vertically height adjustable from 650 - 950mm

Kit includes:

- 1x Wall Bar Profile (2950mm length) and Spindle (2850mm length)
- 3x Support Legs
- 5x Support Arms
- 1x Winding Handle Assembly and Winding Handle - can be installed in desired position upon assembly

Available separately:

- Support feet - to be used if the supporting wall is of insufficient strength
- Height adjustable leg covers - for use with or without support feet
- FlexiCorner Bracket Set - joins 2x Flexi height adjustable worktop frame assemblies together

Please note:

- The wall bar and spindle will have to be cut to your required length - the profile should be 50mm shorter than worktop length
- Worktop, wall fixings and front fascia for mounting on the support arms are not included

Warranty:

- 1 year manufacturer warranty

Additional Information

Manufacturer	Ropox
Mounting / Model	Wall / FlexiManual
Max. Load (kg / St)	150 / 23.5
Method of Operation	Manual - Winding Handle
Height Adjustment (mm)	300
Mounting	Wall Mounted, Floor - Optional Feet

www.independent4life.co.uk | info@independent4life.co.uk | Tel: 0800 500 3001 | VAT No: 942447711
EORI GB942447711000